Verification of the Moving Modes Method for the analysis of deformable railroad tracks

Antonio M. Recuero*, **José L. Escalona**#

* Dept. of Mechanical and Industrial Eng.
University of Illinois at Chicago
842 W. Taylor St., 60607, Chicago, IL
arecuero@uic.edu

Dept. of Mechanical and Manufacturing Eng.
University of Sevilla
Camino Descubrimientos, 41092, Sevilla, Spain
escalona@us.es

Abstract

The Moving Modes Method (MMM) (see [1]) is a computational procedure for the dynamic simulation of moving interaction on long flexible bodies in multibody dynamics that has been applied by the authors to the coupled dynamic analysis of railroad vehicles moving on deformable tracks. The MMM makes use of a fully Arbitrary Lagrangian-Eulerian (ALE) description of a long solid whose mechanical properties are captured using a dynamics-preserving selection of modes. In this study, the mesh moves through the solid at a prescribed velocity. The ALE frame of reference used to describe the flexible body dynamics can also be used as a trajectory frame of reference (TF) for a set of bodies that interact with the long flexible body. This paper shows that a method combining a trajectory frame of reference, an ALE description of a long solid, and structure deformation based on assumed modes is an accurate approach for the study of moving multibody systems interacting with linear complex structures. The method allows the use of a reduced set of elastic coordinates to accurately include the dynamics of flexible bodies. Important features of this formulation are commented on, aiming at providing a comprehensive description of a method that can be used for the accurate simulation of bodies traveling on long solids. Some numerical results of the semianalytical solution to a beam resting on a Winkler foundation are analyzed and compared with the equations of a moving trajectory frame of reference and moving modes. Both methods are found to be equivalent, whereas the MMM allows to model arbitrary, continuous structures.

The use of a moving trajectory frame of reference for moving loads allows for a convenient and accurate description of the interaction of moving bodies on deformable continuum: The coordinates are referred to a kinematic reference closely related to the dynamic evolution of the interaction [1]. This has clear advantages for the simulation of such systems: (a) steady motion and stability analysis can be easily performed, (b) the coordinates remain small, which can avoid numerical issues and (c) in case of moving interaction, it allows for a better description of the interacting structure's dynamics.

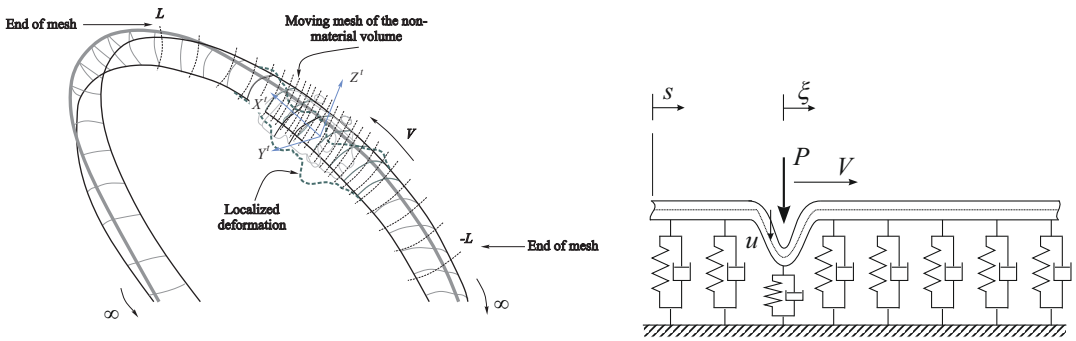

(a) (b)

Figure 1: Moving Modes Method and moving load on Winkler beam

The Lagrange equations of a structure interacting with moving bodies can be derived using the systematic approach presented by Irschik and Holl in Ref. [2] for non-material volumes. These Lagrange equations may be written in the following form:

$$\frac{\mathrm{d}}{\mathrm{d}t}\frac{\partial T}{\partial \dot{\mathbf{q}}_e} - \frac{\partial T}{\partial \mathbf{q}_e} + \int_{\partial\Omega} \frac{\partial T'}{\partial \dot{\mathbf{q}}_e}(\mathbf{v}_0 - \mathbf{w}_0)\cdot \mathbf{n}\mathrm{d}S - \int_{\partial\Omega} T' \frac{\partial(\mathbf{v}_0 - \mathbf{w}_0)}{\partial \dot{\mathbf{q}}_e}\mathbf{n}\mathrm{d}S = \frac{\partial U_e}{\partial \mathbf{q}_e} + \frac{\partial F_e}{\partial \dot{\mathbf{q}}_e}. \tag{1}$$

If, for convenience, the non-material volume is selected as long as necessary, the Lagrange equations for this particular application take the following classical form. The equations in Eq. (1) particularized to the MMM can be rewritten in the following form:

$$\mathbf{M}_r\ddot{\mathbf{q}}_e + (\mathbf{C}_r + \mathbf{N}_r)\,\dot{\mathbf{q}}_e + \mathbf{K}_r\mathbf{q}_e = \mathbf{S}^{\mathrm{T}}\mathbf{F}_{cf}, \tag{2}$$

The MMM presented in this paper to describe the dynamics of infinite structures under moving loads is validated using as a reference solution the dynamics of an infinite beam on a Winkler foundation under the action of constant-velocity moving loads. This problem has a known solution that can be evaluated using a semi-analytical procedure. The system is shown in Fig. 1. Fig. 2 shows the Frequency Response Modes (FRM) ϕ_k obtained with V = 100 m/s which are the deformation modes selected in this investigation. The modes are symmetrical for V = 0 m/s but non-symmetrical for V = 100 m/s. This is a result of the fact that the wave propagation velocity in the forward direction is different from that velocity in the backward direction in case of a moving disturbance.

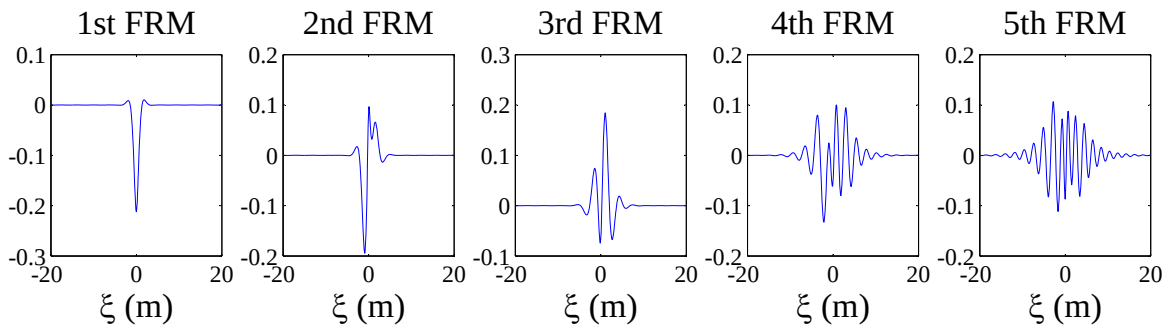

Figure 2: Orthonormal FRM obtained with V = 100m/s

In the simulated problem it is assumed that in the initial instant the Winkler beam shows a steady deformation under the influence of a constant-amplitude moving load with V = 100 m/s. At t = 0 the load is suddenly removed. Figure 3 shows the deformed shape of the beam at different instants of time using different sets of modes obtained with load velocities V = 0, 20 and 60 m/s. Results are accurate only when non-symmetric modes, which are caused by the velocity of the load, are used.

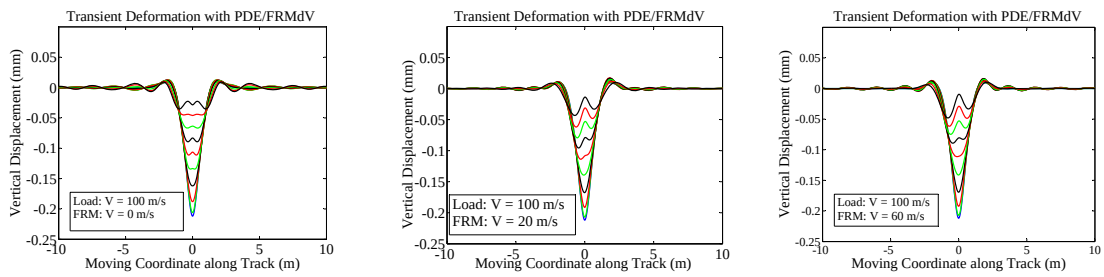

(a) (b) (c)

Figure 3: Influence of the FRM used in the reduced-order response. Deformed shape at different instants

References

[1] A.M. Recuero, J.L. Escalona. Application of the trajectory coordinate system and the moving modes method approach to railroad dynamics using Krylov subspaces. Journal of Sound and Vibration **332**, 5177-5191 (2013).

[2] H. Irschik, H. Holl. The equations of Lagrange written for a non-material volume. Acta Mechanica **248**, 231-248 (2002).