11th World Congress on Computational Mechanics (WCCM XI)
5th European Conference on Computational Mechanics (ECCM V)
6th European Conference on Computational Fluid Dynamics (ECFD VI)
July 20 - 25, 2014, Barcelona, Spain

VIBRATION MODELING OF VISCOELASTIC SANDWICH STRUCTURES USING SOLID-SHELL FINITE ELEMENTS

F. Kpeky[1], H. Boudaoud[1], H. Chalal[2], F. Abed-Meraim[2] and E.M. Daya[1]

[1] LEM3, Université de Lorraine, F-57045 Metz, France,
fessal.kpeky@univ-lorraine.fr, hakim.boudaoud@univ-lorraine.fr,
el-mostafa.daya@univ-lorraine.fr

[2] LEM3, Ecole Nationale Supérieure d'Arts et Métiers, F-57078, Metz, France,
hocine.chalal@ensam.eu, farid.abed-meraim@ensam.eu

Key Words: *Finite elements, Solid-Shell, Vibration, Viscoelastic Sandwich.*

In many domains, vibrations are undesirable because they lead to noise and system dysfunction. An efficient passive solution to reduce vibrations is the use of sandwich structures with elastic faces and viscoelastic core [1].

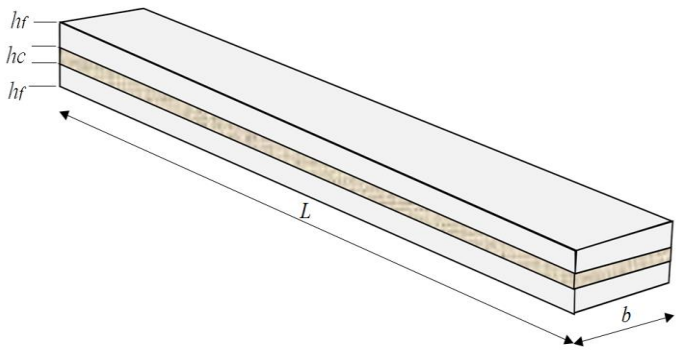

Fig 1: Sandwich beam structure.

Various kinematic models and numerical methods have been devoted to determine accurately the damping properties of viscoelastic sandwich structures. A review and assessment of such approaches have been presented in Hu et al. [2]. It emerges from this review that the simplified shell model with zigzag displacement layerwise theories leads generally to accurate solutions. Nevertheless, in some identified cases [2], the proposed thin shell model is not sufficient: this model provides the continuity of the displacements but does not correctly estimate the stresses and strains and especially when the materials constituting the layers of the structure have very different rigidities or when the layers have a high hc/hf ratio (Fig1).

In these limiting cases, an alternative approach could be the use of three-dimensional finite element assemblies, but this generally leads to a large number of degrees of freedom.

For structural problems, an eight-node solid-shell element based on a fully three-dimensional formulation has been developed in order to correctly take into account the through-thickness phenomena, while maintaining the CPU time at reasonable levels [3, 4].

The purpose of the current work is to combine the recently developed solid-shell concept [4] with sandwich structure modeling in order to evaluate its capabilities in analyzing vibration of viscoelastic sandwich structures. A number of representative applications will be presented.

REFERENCES

[1] E.M. Daya and M. Potier-Ferry. Finite element for viscoelastically damped sandwich structures. *Revue Eur. Eléments finis*, vol. **11**, pp. 39–56, 2002.

[2] H. Hu, S. Belouettar, M. Potier-Ferry and E.M. Daya. Review and assessment of various theories for modelling sandwich composites. *Composite Structures*, vol. **84**, pp. 282–292, 2008.

[3] F. Abed-Meraim and A. Combescure. SHB8PS – a new adaptive, assumed-strain continuum mechanics shell element for impact analysis. *Computers & Structures*, vol. **80**, pp. 791–803, 2002.

[4] F. Abed-Meraim, A. Combescure. An improved assumed-strain solid–shell element formulation with physical stabilization for geometric nonlinear applications and elastic-plastic stability analysis. *Int. J. Num. Meth. Engng.*, vol. **80**, pp. 1640–1686, 2009.